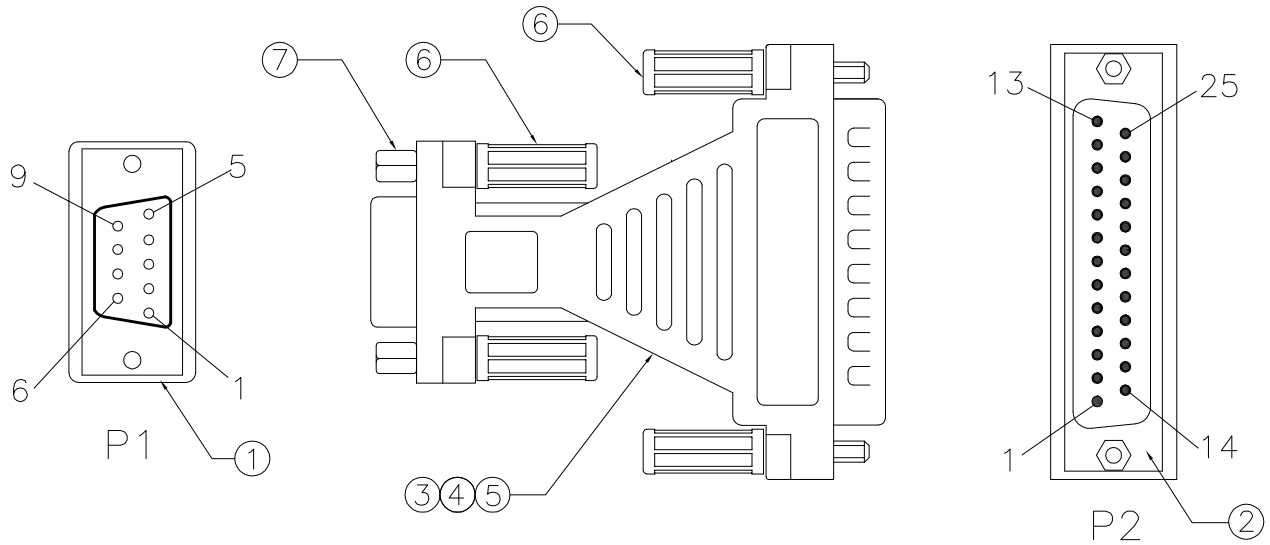

Electrical test:
1.100% short,open,miss wire test
2.Conduct resistance:2 Ohm(max)
3.Insulation resistance:5Mohm(min)
4.Dielectric test:DC 300V

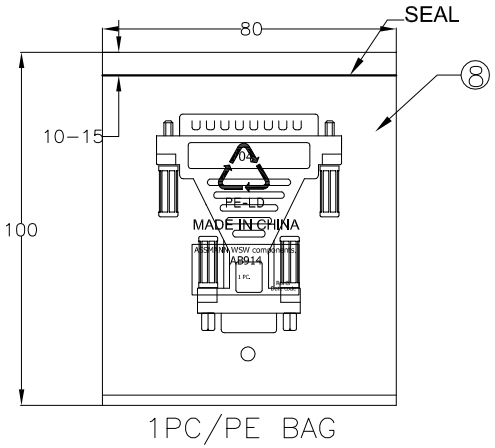

PIN ASSIGNMENT:

P1	P2
1	8
2	3
3	2
4	20
5	7
6	6
7	4
8	5
9	22
SHELL	SHELL

NO.	NAME	Q'TY	SPECIFICATION
⑨	PE BAG	1/10	CLEAR SIZE: 170*250*0.05mm PRINT BLACK"MADE IN CHINA""+"10PCS"
⑧	PE BAG	1	CLEAR SIZE: 80*100*0.05mm PRINT BLACK"MADE IN CHINA" +"1PC"
⑦	NUT	2	UNT:#4-40UNC 4.75*5.9mm NICKEL PLATED
⑥	SCREW	4	THUMB SCERW #4-40UNC L21mm MOLD BEIGE(IV-29#)
⑤	OUT JACKET	30g	40P PVC BEIGE(IV-29#)
④	IN JACKET	7.8g	CLEAR LD-PE
③	CABLE	445mm	UL1007 26AWG COLOR BLACK L1=45mm*9PCS L2=50mm*1PCS.
②	CONN	1	DB25P MALE SOLDER TYPE PIN G/F,BLUE INSULATION SHELL-NICKEL,
①	CONN	1	DB9P FEMALE SOLDER TYPE G/F ,BLUE INSULATION SHELL-NICKEL,

RoHS compliant
Unit: mm

Scale	Free				Date	Name	Customer-No.
TOLERANCE				Drawn	20.02.2017	Amy	
				Approved	20.02.2017	Amy	ASSMANN WSW-No. AB914
DIM	TOL						Drawing-No. ASS 7868 CA rev00
		⓪	Drawn	20.02.2017	Amy		
Angle	TOL	Id.	Modification	Date	Name		Replace / Sheet

ASSMANN WSW components